REV	DESCRIPTION	ECN/ECR	DATE	DRAWN BY
A0	新訂圖面	——	03/11/2015	唐忠洪
A1	修改图面与客户图纸一致	ECR	08/22/2019	左胜胜

RoHS Compliant

Halogen Free

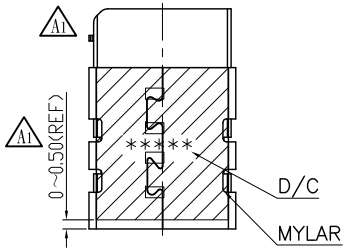

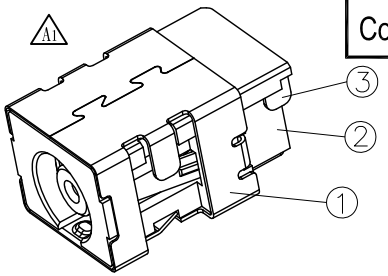

SCHEMATIC

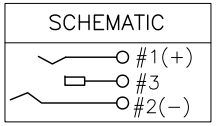

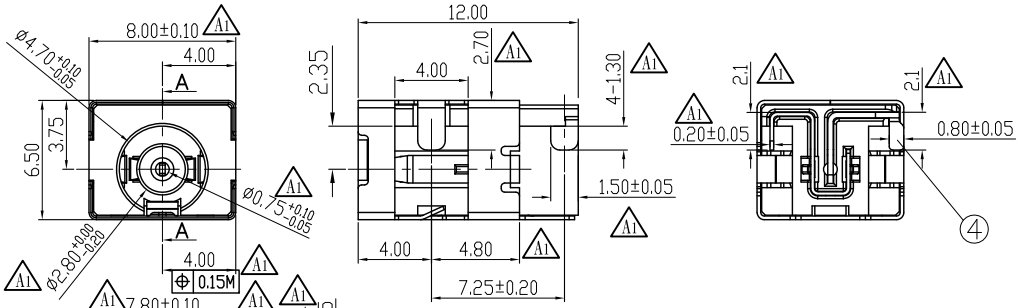

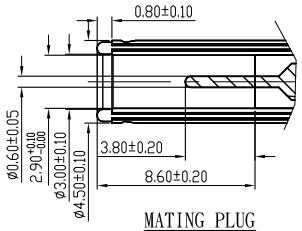

MATING PLUG
FUAN GEE
45P06CV230-1A00-01

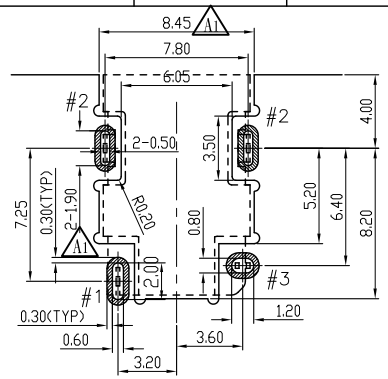

RECOMENDED PCB LAYOUT
TOLERANCE:±0.05mm
RECOMENDED PCB THICKNESS:1.20±0.05

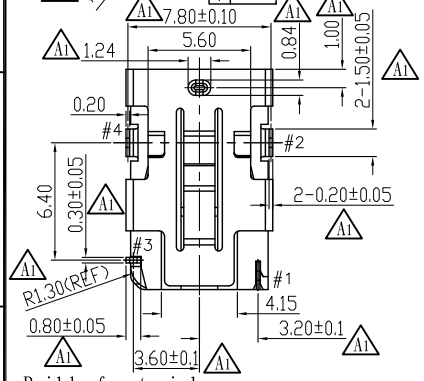

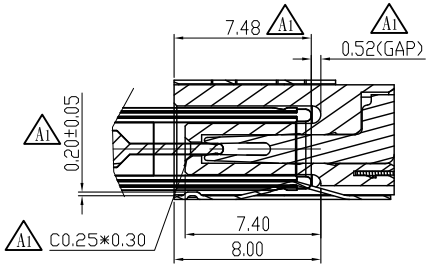

SECTION:A−A

SPECIFICATIONS:

1.ELECTRICAL SPEC:
- 1−1.RATED CURRENT:7A
- 1−2.RATED VOLTAGE:20V
- 1−3.INSULATION RESISTANCE:100MΩ MIN.AFTER BY 500V DC FOR 1MINUTE
- 1−4.DIELECTRIC WITHSTANDING VOLTAGE:500V AC FOR 1MINUTE
- 1−5.CONTACT RESISTANCE:30mΩ MAX(INITIAL)

2.MECHANICAL SPEC:
- 2−1.INSERTION FORCE:2.5Kgf MAX
- 2−2.WITHDRAWAL FORCE:
  - INITIAL:0.70 Kgf MIN
  - AFTER LIFE 0.5 Kgf MIN

3.WEIGHT:1.0 GRAM

4.TEMPERATURE RISE CAN'T EXCEED 30°C MAX

5.LIFE TEST(INSERTION/WITHDRAWAL):5000 CYCLES MIN

6.LOW HALOGEN SPEC:
- 6.1 Br< 900 ppm
- 6.2 Cl< 900 ppm
- 6.3 Br+Cl< 1500 ppm

Build of material:

NO	DESCRIPTION	QTY	MATERIAL	FINISH(OR COLOR)
5	MYLAR	1	N/A	YELLOW
4	DC JACK 沉板式(8.0*6.5)-DETECT PIN	1	PHOSPHOR BRONZE(C5210R) T=0.30±0.05mm	50u"Ni min,30u" Pd/Ni min with 5u"Au,120u"Sn min
3	DC JACK 沉板式(8.0*6.5)-POWER PIN	1	PHOSPHOR BRONZE(C5210R) T=0.20±0.05mm	50u"Ni min,30u" Pd/Ni min with 5u"Au,120u"Sn min
2	DC JACK 沉板式(8.0*6.5)-HOUSING	1	PA4T (DSM)	BLACK
1	DC JACK 沉板式(8.0*6.5)-SHELL	1	PHOSPHOR BRONZE(C5210R) T=0.20±0.05mm	50u"Ni min,30u" Pd/Ni min with 5u"Au,120u"Sn min

2014562−2
PART NUMBER

東莞世華電子有限公司
SHYH HWA ELECTRONICS CO.,LTD.(DONGGUAN)
地址:東莞市塘厦鎮諸佛嶺178工業區
TEL:0769−7910020−1 FAX:0769−7910210

DRAWN BY	左胜胜	ITEM	DC JACK 沉板式 8.0*6.5 (板上1.40)	ANGLE PROJECTION	UNIT: mm
CHECKED BY					SCALE: 1:1
APPROVED BY		PART NO	CD2431042002	TOLERANCE .X±0.30 .XX±0.20	DATE: 08/22/2019