REV	DESCRIPTION	ECN/ECR	DATE	DRAWN BY
A6	增加彈片尺寸	——	07/20/2018	王 奔
A7	增加彈片尺寸	——	10/23/2018	王 奔

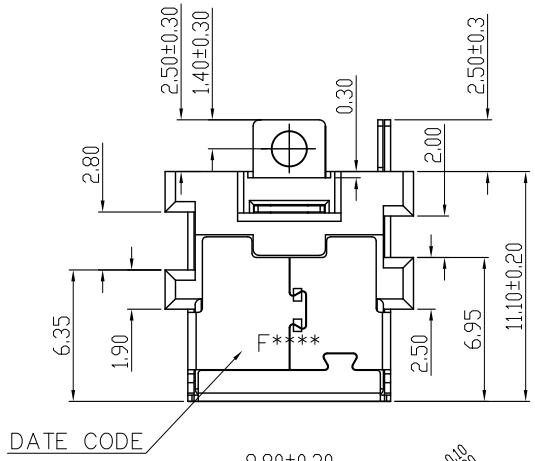

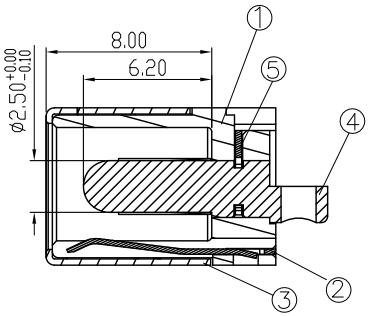

SECTION:A—A

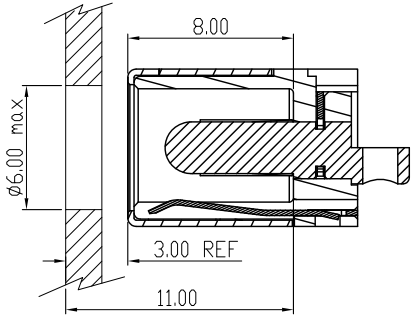

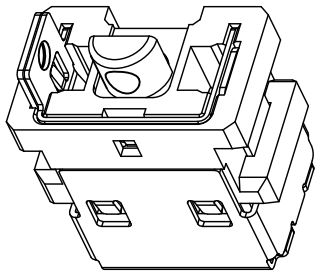

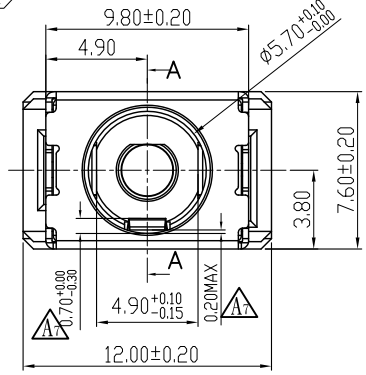

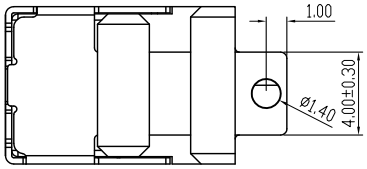

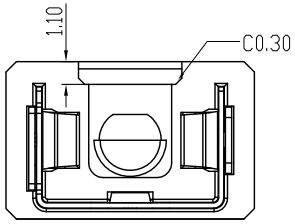

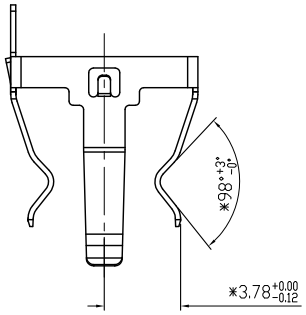

P/N: 075-0031-454

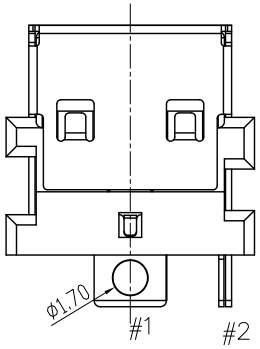

SPECFICTIONS:
1.ELECTRICAL CHARACTERISTICS:
1-1.RATING:20V 10A
1-2.CONTACT RESISTANCE:15mΩ MAX.
1-3.DIELECTRIC WITHSTANDING VOLTAGE:500V AC FOR ONE MINUTE.
1-4.INSULATION RESISTANCE:100MΩ MIN. MEASURED BY 500VDC
2.MECHANICAL CHARACTERISTICS:
2-1.INSERTION FORCE:0.8~2.0kg(INITIAL/AFTER LIFE TEST)
2-2.WITHDRAWAL FORVE:0.8~2.0kg(INITIAL/AFTER LIFE TEST)
3.TEMPERATURE RISE CAN'TEXCEED 30°C.
4.LIFE TEST 8,000 CYCLES MIN.
5.MATERIAL:
5-1:HOUSING:PA4T(HF);UL 94V-0,
COLOR:BLACK
5-2:TIP SPRING:PHOSPHOR BRONZE(C5210R-EH);T=0.25mm
TREATMENT:MATTE SN 80u"(ALL OVER NI 50u" MIN)
5-3:SHELL:SUS(201);T=0.30mm,TREATMENT:50u" NI
5-4:PIN:BRASS(C3604);TREATMENT:GOLD FLASH OVER Ni 50u" NI
5-5:TERMINAL:SUS(304).T=0.30mm

SCHEMATIC
#1 PIN(+)
#2 SPRING(−)

D/C 說明: F4103
FOXCONN
星期三
第十周
2014年

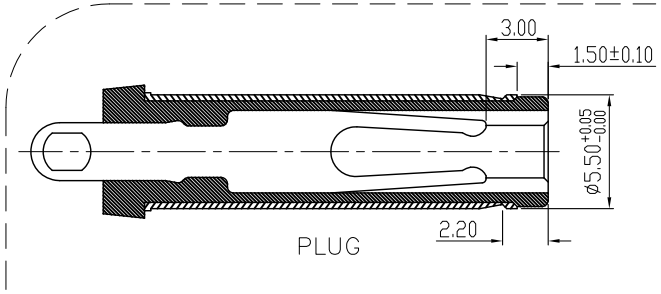

東莞世華電子有限公司
SHYH HWA ELECTRONICS CO.,LTD.(DONGGUAN)
地址:東莞市塘廈鎮諸佛嶺178工業區
TEL:0769-7910020-1 FAX:0769-7910210

DRAWN BY	王 奔	ITEM	DC POWER JACK(9.80*7.60)	ANGLE PROJECTION	UNIT	mm
CHECKED BY					SCALE	1:1
APPROVED BY		PART NO	CD4511042008	TOLERANCE .X±0.30 .XX±0.20	DATE	10/23/2018